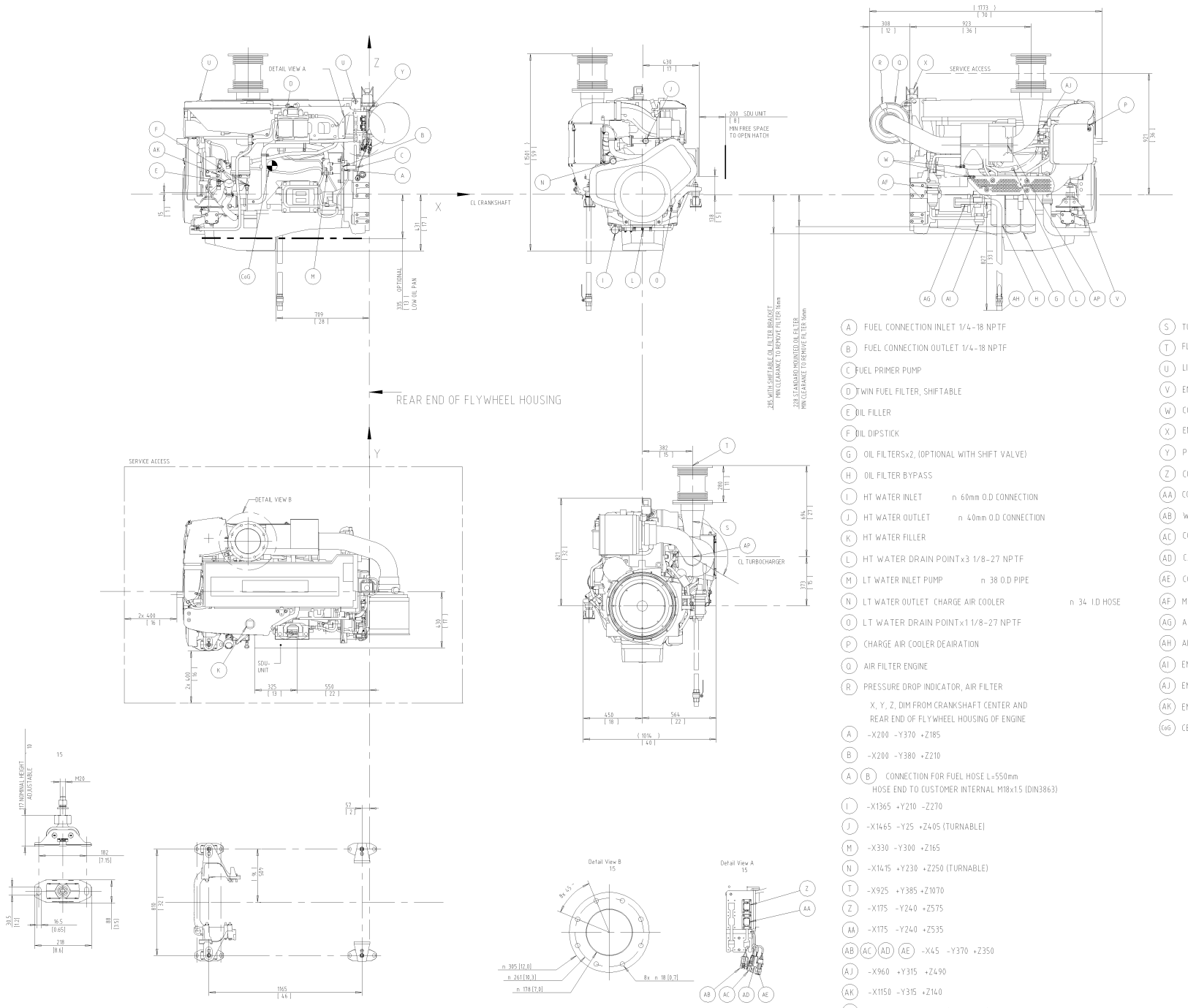

A FUEL CONNECTION INLET 1/4-18 NPTF
B FUEL CONNECTION OUTLET 1/4-18 NPTF
C FUEL PRIMER PUMP
D TWIN FUEL FILTER, SHIFTABLE
E OIL FILLER
F OIL DIPSTICK
G OIL FILTERSx2, (OPTIONAL WITH SHIFT VALVE)
H OIL FILTER BYPASS
I HT WATER INLET n 60mm O.D CONNECTION
J HT WATER OUTLET n 40mm O.D CONNECTION
K HT WATER FILLER
L HT WATER DRAIN POINTx3 1/8-27 NPTF
M LT WATER INLET PUMP n 38 O.D PIPE
N LT WATER OUTLET CHARGE AIR COOLER n 34 I.D HOSE
O LT WATER DRAIN POINTx1 1/8-27 NPTF
P CHARGE AIR COOLER DEAIRATION
Q AIR FILTER ENGINE
R PRESSURE DROP INDICATOR, AIR FILTER
X, Y, Z, DIM FROM CRANKSHAFT CENTER AND REAR END OF FLYWHEEL HOUSING OF ENGINE
A -X200 -Y370 +Z185
B -X200 -Y380 +Z210
A B CONNECTION FOR FUEL HOSE L=550mm HOSE END TO CUSTOMER INTERNAL M18x1.5 (DIN3863)
I -X1365 +Y210 -Z270
J -X1465 -Y25 +Z405 (TURNABLE)
M -X330 -Y300 +Z165
N -X1415 +Y230 +Z250 (TURNABLE)
T -X925 +Y385 +Z1070
Z -X175 -Y240 +Z575
AA -X175 -Y240 +Z535
AB AC AD AE -X45 -Y370 +Z350
AJ -X960 +Y315 +Z490
AK -X1150 -Y315 +Z140
AP -X745 +Y385 +Z375 (TURNABLE)
CoG -X740 +Y10 +Z215

S TURNABLE EXHAUST BEND 120
T FLEXIBLE COMPENSATOR EXHAUST SYSTEM n 7" (OPTIONAL)
U LIFTING EYESx3 n 30MM
V ENGINE SUSPENSION
W CONNECTION BATTERI POS. AND NEG. M12 SCREW
X EMERGENCY STOP
Y POWER CONTROL MODULE
Z CONNECTOR A
AA CONNECTOR B
AB WIF CONNECTOR
AC CONNECTOR EXTERNAL STOP
AD CAN 2
AE CONNECTOR EASY LINK
AF MANUAL OIL DRAIN PUMP, 20mm I.D HOSE (OPTIONAL)
AG AIR STARTER MOTOR (OPTIONAL)
AH AIR STARTER CONNECTION, FERRULE FITTING n 28MM PIPE
AI ENGINE HEATER 220V (OPTIONAL)
AJ ENGINE COOLANT SHUTDOWN SWITCH (OPTIONAL)
AK ENGINE OILPRESSURE SHUTDOWN SWITCH (OPTIONAL)
CoG CENTRE OF GRAVITY

DRY WEIGHT 1480 KILOGRAM
OIL CAPACITY AND COOLING WATER CAPACITY SEE DATA SHEET
SCALE: 1:10

SYMBOLS, DESIGNATIONS AND GENERAL DRAWING METHODS (STD 101-0005)

The copying and further use of this document as well as the communication of its contents to others without express authorization is prohibited. Offenders will be liable for the payment of damages. All rights reserved in the event of the grant of a patent, utility model or ornamental design registration.

VOLVO PENTA

Document title: ENGINE DIMENSION D13 MH KC BOBTAIL AIR/EL STARTER
Document type: DIMENSIONS DRAWING
Other manuals document parts:
Document No: 21693392
Issue Index: 04
Sheet No: 1111